# More Surface Area

Geometry & Shapes

Name: _____ Date: _____ Grade 6

**Problems 1–2: A rectangular prism is 10 units long, 4 units wide, and 5 units tall. Here is the prism and its net.**

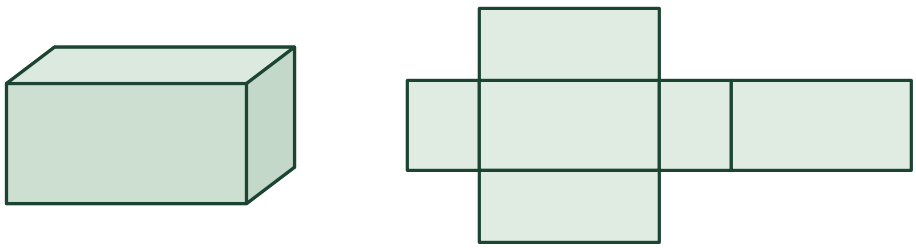

**1. Use the rectangular prism to label all the lengths in the net.**

**2. Use the net to calculate the surface area in square units. Show or explain your thinking.**

**3. The net for Figure A is shown. Each square on the grid has an area of 1 square unit.**

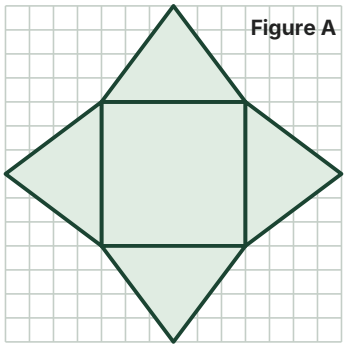


**a** Name the type of polyhedron the net would form.

_____

**b** Determine the surface area of the polyhedron.

**4. The net for Figure B is shown.**

**a** Name the type of polyhedron the net would form.

_____

**b** Determine the surface area of the polyhedron.

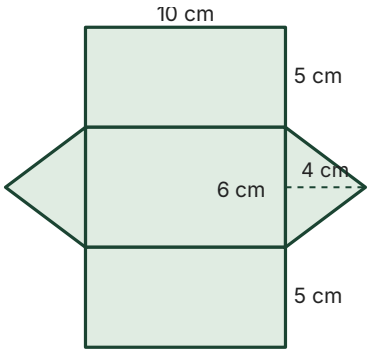


**Figure B**

**5. Here is the net of a triangular prism. The triangles are right triangles. Determine the surface area.**

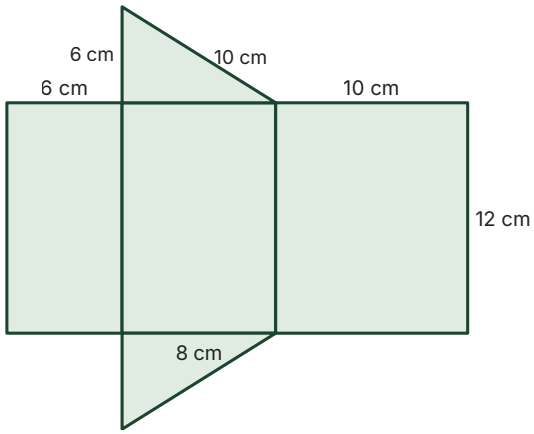


**6. Jake claims the surface area of this square pyramid is 384 square centimeters. Is Jake correct? Explain your thinking.**

