More Surface Area

Geometry & Shapes • Answer Key

ANSWER KEY • Amplify Alignment: Grade 6 Accelerated, Unit 1, Lesson 11

Problems 1–2: A rectangular prism is 10 units long, 4 units wide, and 5 units tall. Here is the prism and its net.

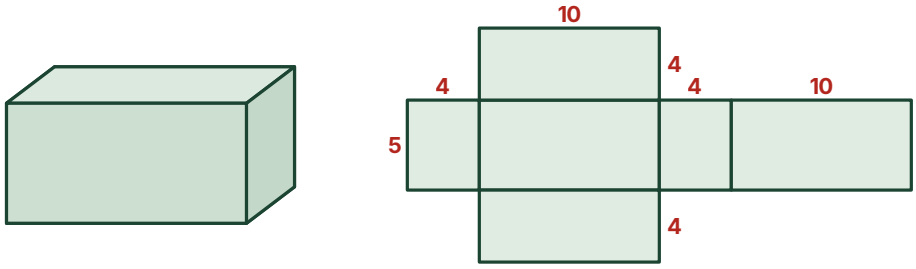

1. Use the rectangular prism to label all the lengths in the net.

Lengths shown in red on the net.

2. Use the net to calculate the surface area in square units. Show or explain your thinking.

Two 10 × 5 faces (100), two 10 × 4 faces (80), and two 4 × 5 faces (40). 100 + 80 + 40 = 220 square units

3. The net for Figure A is shown. Each square on the grid has an area of 1 square unit.

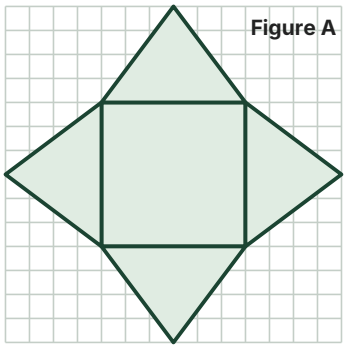

a Name the type of polyhedron the net would form.

Square pyramid

b Determine the surface area of the polyhedron.

Base 6 × 6 = 36. Each triangle $\frac{1}{2} \cdot 6 \cdot 4 = 12$, and 4 × 12 = 48. 36 + 48 = 84 square units

4. The net for Figure B is shown.

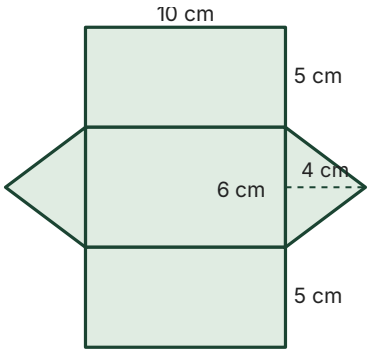

Figure B

a Name the type of polyhedron the net would form.

Triangular prism

b Determine the surface area of the polyhedron.

Two triangles: $2 \times \frac{1}{2} \cdot 6 \cdot 4 = 24$. Rectangles: $10 \times 5 + 10 \times 6 + 10 \times 5 = 160$. $24 + 160 = 184$ sq. cm

5. Here is the net of a triangular prism. The triangles are right triangles. Determine the surface area.

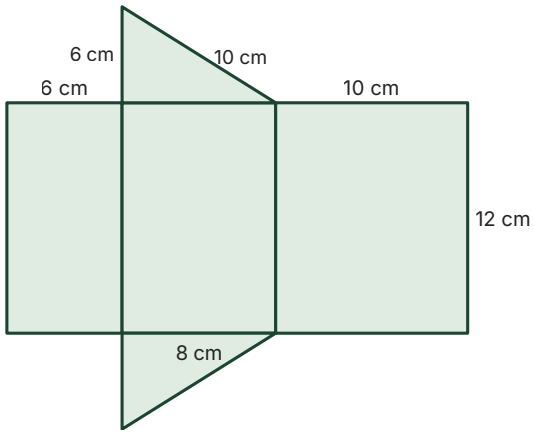

Two triangles: $2 \times \frac{1}{2} \cdot 6 \cdot 8 = 48$. Rectangles: $12 \times 6 + 12 \times 8 + 12 \times 10 = 288$. $48 + 288 = 336$ sq. cm

6. Jake claims the surface area of this square pyramid is 384 square centimeters. Is Jake correct? Explain your thinking.

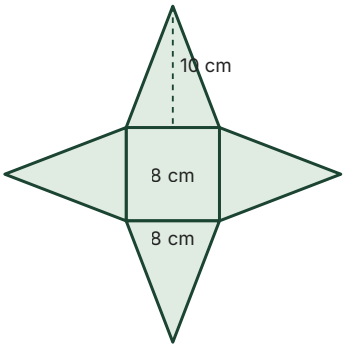

No. The base is $8 \times 8 = 64$. Each triangle is $\frac{1}{2} \cdot 8 \cdot 10 = 40$, and $4 \times 40 = 160$. $64 + 160 = 224$ sq. cm. Jake forgot to take half of base × height for the triangles.